MTD
For A Growing World.™

L 14
FORM NO. 769-05609E

MTD Products Aktiengesellschaft • Saarbrücken • Germany

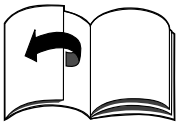

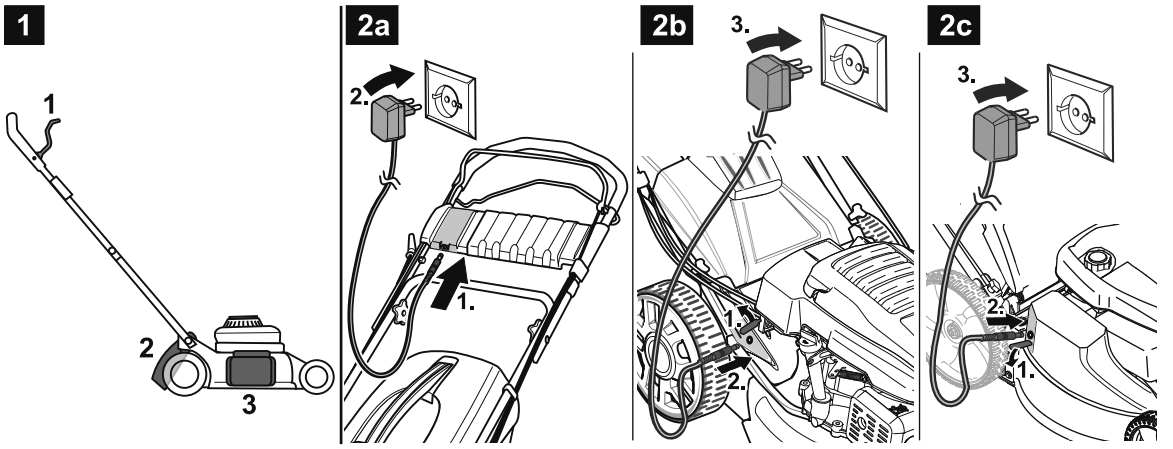
1
1
2
3
2a
2.
1.
2b
3.
1.
2.
2c
3.
2.
1.

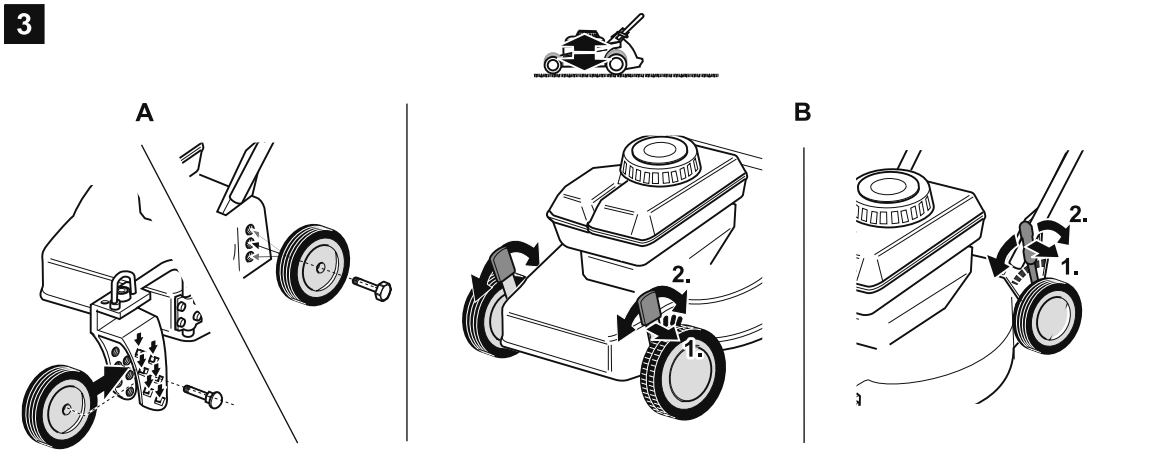
3
A
2.
1.
B
2.
1.

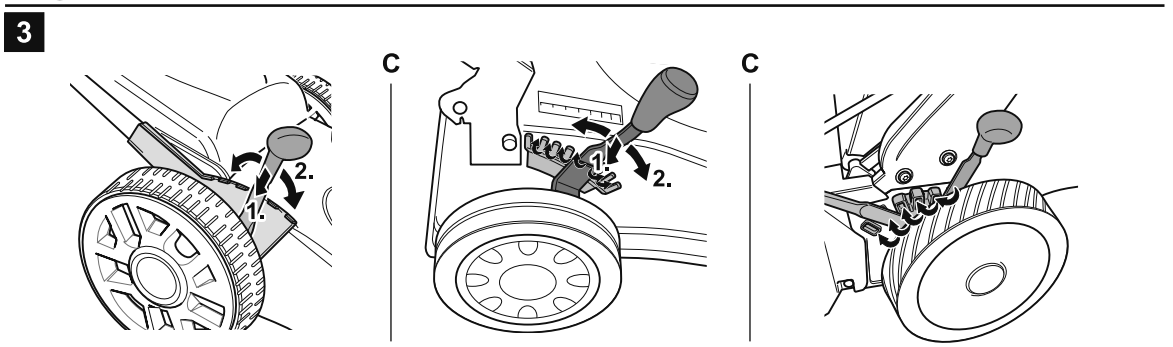
3
2.
1.
C
1.
2.
C

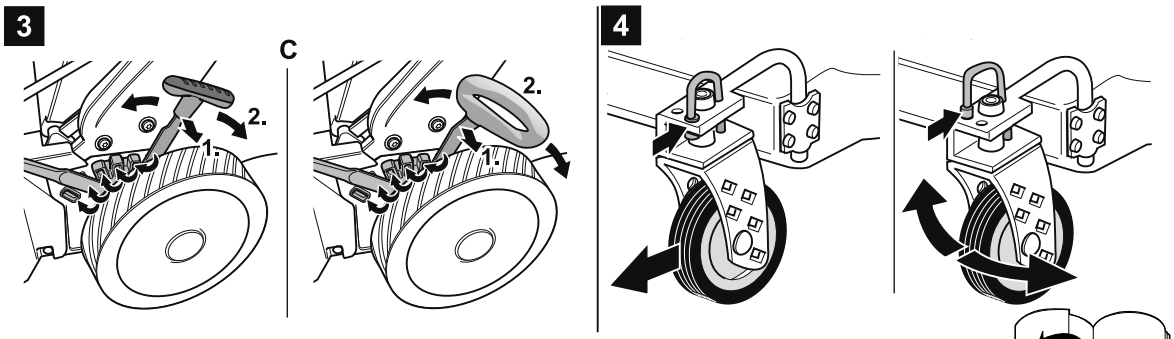
3
2.
1.
C
2.
1.
4

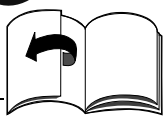

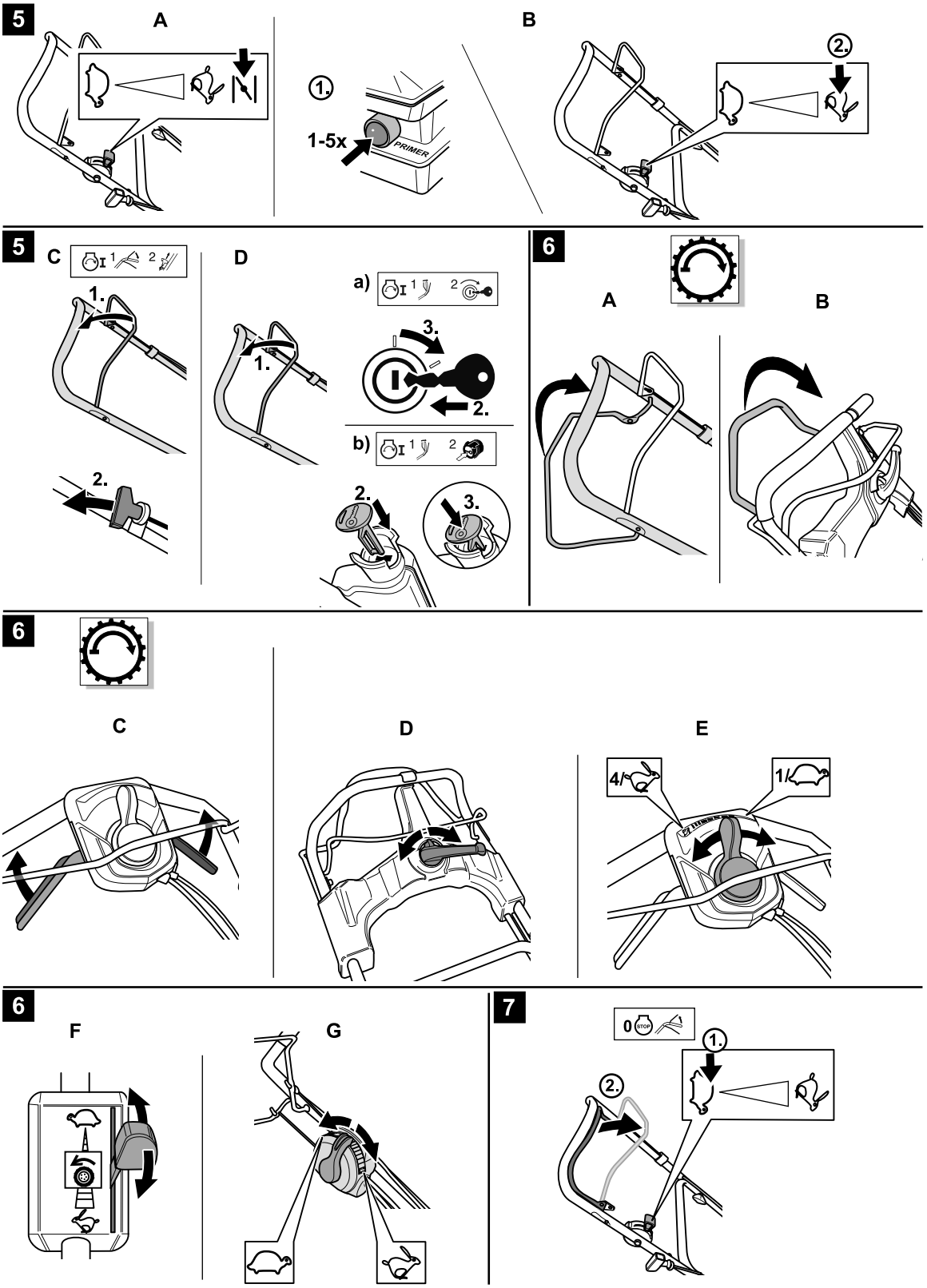
5
A
B
1.
1-5x
PRIMER
2.
5
C
D
1.
2.
a)
3.
2.
b)
2.
3.
6
A
B
6
C
D
E
4/
1/
6
F
G
7
0 STOP
1.
2.

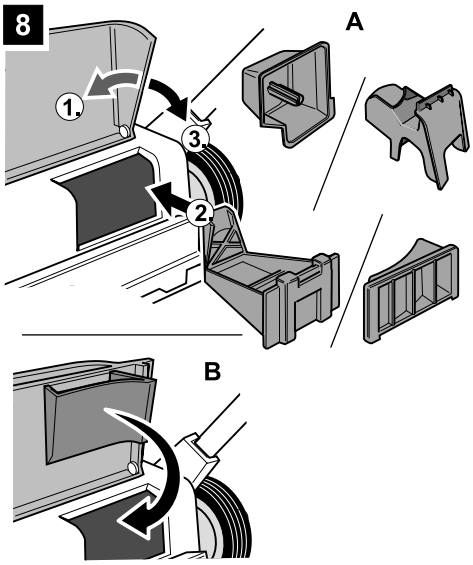
8
A
1.
2.
3.
B

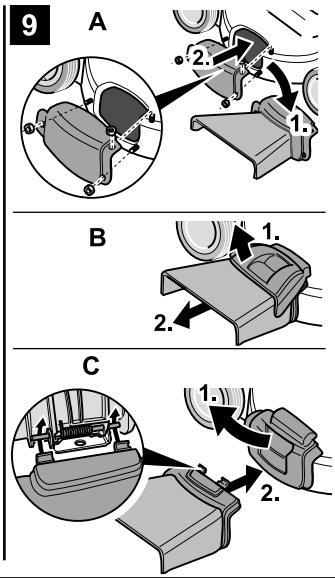
9
A
2.
1.
B
1.
2.
C
1.
2.

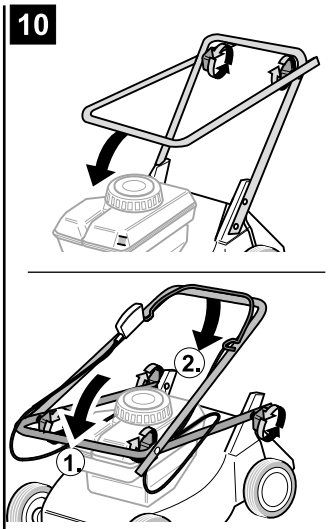
10
2.
1.

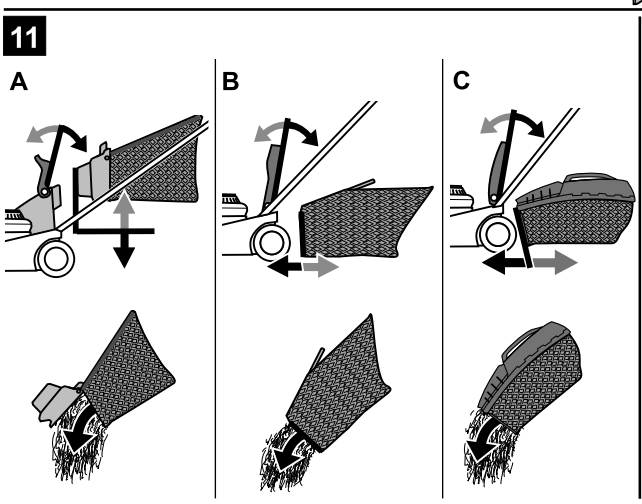
11
A
B
C

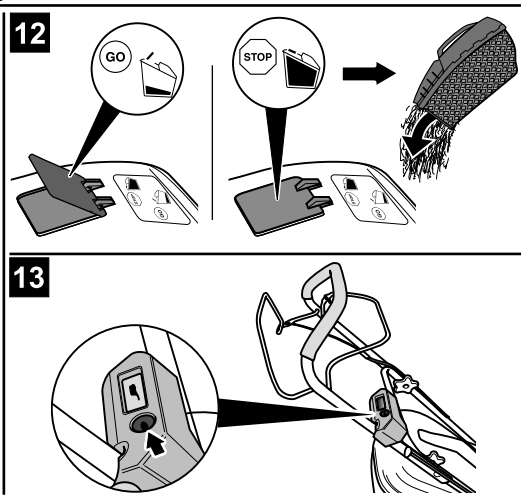
12
GO
STOP
13

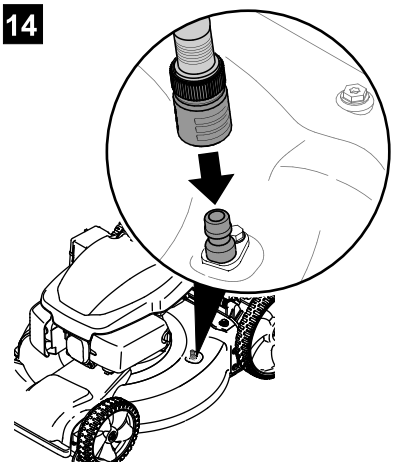
14

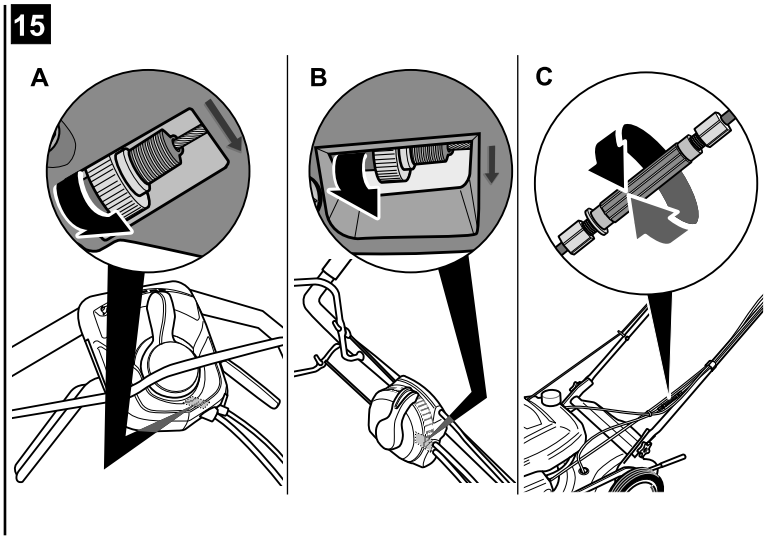
15
A
B
C

English 4
(Original operating instructions)

Français 14
(Notice d'instructions d'origine)

Deutsch 25
(Originalbetriebsanleitung)

Nederlands 35
(Originele gebruiksaanwijzing)

Italiano 45
(Istruzioni per l'uso originali)

Español 55
(Instrucciones de funcionamiento originales)

Svenska 66
(Originalbruksanvisning)

Dansk 74
(Originale driftsvejledning)

Norsk 83
(Originale driftsanvisningen)

Suomi 92
(Alkuperäinen käyttöohjekirja)

Português 101
(Instruções de serviço originais)

Ελληνικά 111
(Αυθεντικές οδηγίες χειρισμού)

Magyar 123
(Eredeti üzemeltetési útmutató)

Polski 132
(Oryginalna instrukcja obsługi)

Česky 142
(Originální návod k obsluze)

Slovensky 151
(Originálny návod na obsluhu)

Româneşte. 160
(Instrucțiuni de funcționare originale)

Slovensko 170
(Izvirno navodilo za obratovanje)

Hrvatski 179
(Originalna uputa za rad)

Srpski 188
(Originalno uputstvo za rad)

Bosanski 197
(Originalna uputa za rad)

Македонски 206
(Оригинално упатство за користење)

Türkçe 217
(Orijinal işletme kılavuzu)

Русский 228
(Оригинальная инструкция по эксплуатации)

Українська 240
(Оригіналний посібник з експлуатації)

Български 250
(Оригинално упътване за експлоатация)

Eesti 261
(Originaalkasutusjuhend)

Lietuviškai 271
(Originali naudojimo instrukcija)

Latviešu valodā 281
(Lietošanas pamācības oriģināls)

Contents

For your safety 4
Assembling the appliance 6
Operating safety 6
Tips on lawn care 9
Transporting the appliance 9
Servicing/cleaning 10
Laying up the vehicle 11
Warranty 11
Engine 11
Identifying and eliminating malfunctions 11

Information on rating plate

These details are very important for identifying your appliance when you order spare parts or contact our aftersales service. The rating plate is found near the engine.
Enter all the details on your appliance's rating plate in the following fields.

_____

_____

_____

This and other appliance information can be found on the separate CE declaration of conformity which is a component of these operating instructions.

Illustrations

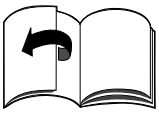

Fold out the illustrated pages at the start of the operating instructions.

Various models are described in these operating instructions. Graphical representations may deviate in detail from the purchased unit.

For your safety

Use the appliance properly

This appliance is approved solely for use
- in accordance with the descriptions and safety instructions specified in this user's guide;
- to mow the lawns of domestic and leisure gardens.

Any other use is not as intended. Improper use is not covered by the warranty and the manufacturer will reject any liability. The user is liable for all damage caused to third parties and their property.

Unauthorized modifications made to the mower rule out any liability on the part of the manufacturer for damage resulting therefrom.

Only for units with electric starter:

When the appliance is fitted with an electric starter, the provided battery charger is intended exclusively to charge the battery fitted in the appliance. The battery must be charged from this battery charger only.

Observe the safety and operating information

Before using the appliance for the first time, read and follow these operating instructions carefully. Keep these instructions in a safe place for future reference.
Never allow children or other persons to use the lawnmower who do not know the operating instructions.

If the appliance changes ownership, hand over the operating instructions.

General safety information

In this section you will find general information about safety.
Warnings that apply specifically to individual parts of the appliance, functions or activities are shown at the corresponding point in this user's guide.

Before working with the appliance

Persons using the appliance must not be under the influence of intoxicants, e.g. alcohol, narcotics, medication, etc.
Persons younger than 16 years of age must not use the unit or perform other work on the unit, such as maintenance, cleaning, adjusting, – local regulations can determine the minimum age of the users.

This appliance is not intended for use by persons (including children) with reduced physical, sensory or mental capabilities, or lack of experience and knowledge, unless they have been given supervision or instruction concerning use of the appliance by a person responsible for their safety.
Children should be supervised to ensure that they do not play with the appliance.

Before you begin work, make that you are familiar with all attachments and operating controls as well as their functions.

Store fuel in approved receptacles only, and never near sources of heat, eg. ovens, hot water tanks, etc.
Fuel the appliance outdoors only.
Do not refill the fuel tank while the engine is running or if it is still hot.

Replace damaged exhausts, fuel tanks, or filler caps.

Before using the appliance,
- check whether the grass catcher works and the deflector closes correctly. Replace damaged, worn out or missing parts immediately.
- check for any wearing or damage to the cutters, fastening pins, and the whole cutter unit.
  All worn or damaged parts must be replaced in sets at a specialist workshop in order to rule out imbalances.

Spare parts and accessories must satisfy the requirements specified by the manufacturer.
Therefore use original spare parts and original accessories only or spare parts and accessories authorised by the manufacturer.

All repair work must be conducted exclusively at a specia-lised garage.

When working with the appliance

When working with or on the appliance you must wear protective clothing. This includes:
- safety shoes,
- trousers,
- close-fitting garments,
- hearing protection,
- protective goggles, etc.

All safety devices must be installed on the appliance, and they must be complete and in a fully functional condition.

Do not make any changes to the safety devices.

Operate the vehicle only when it is in good technical condition as stipulated and delivered by the manufacturer.

Never change the engine settings preset at the factory.

Keep away from naked flames, avoid creating sparks and do not smoke.

Before all work on this appliance

If the lawnmower has an engine, always turn it off before doing any working on it (e.g. repair work and adjustments) and before transporting it (e.g. lifting or carrying) in order to avoid injury
- switch OFF the engine,
- remove the ignition key (if used),
- wait until all moving parts have come to a complete stop and the engine has cooled down,
- remove the spark plug connector on the engine in order to prevent the engine from accidentally being started,
- which takes into account additional safety information in the engine manual.

After working with the appliance

Never leave the unit without switching off the engine and – if used – without removing the ignition key.

Safety devices

Fig. 1

⚠ ***Danger***

Never use a lawnmower if it has damaged safety devices or if there are no safety devices fitted.

Safety lever (1)

The safety lever stops the motor and cutting blades in an emergency.

There must be no attempt to circumvent this function, which is crucial for your personal safety.

Ejection flap (2) or impact protection (3)

The ejection flap/impact protection protects you from being injured by the blade or by ejected solid objects. The lawnmower must always be operated with the ejection flap or impact protection.

Symbols on the appliance

On the appliance you will find various symbols on adhesive labels. These symbols are explained in the following:

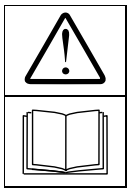

Attention! Before starting up the unit, read the operating instructions!

Keep third parties away from the danger area!

Switch off the engine and remove the ignition key before carrying out any work on the unit and before leaving the unit.

Please follow additional information in the section entitled “For your safety”.

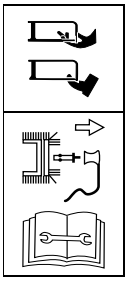

Before working on the cutting tools, remove the spark plug connector! Keep fingers and feet away from the cutting tools! Switch off the lawnmower and remove the spark plug connector before adjusting, cleaning, or checking it.

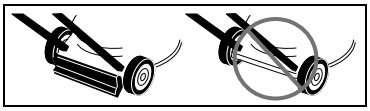

Risk of injury – only work with impact protection mounted.

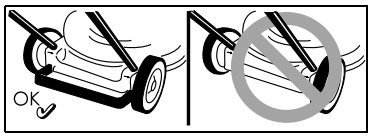

Risk of injury – only work with tail clamp mounted.

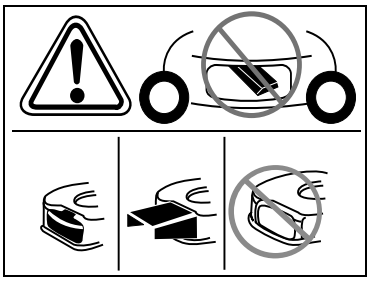

Risk of injury – only work with deflector mounted.

Always keep these symbols on the appliance in a legible state.

Symbols in the user’s guide

Symbols are employed in the user’s guide to indicate hazards or draw attention to important information. They have the following specific meanings:

⚠ ***Danger***

Draws your attention to sources of potential danger associated with the task you are undertaking at the time which constitute a danger to persons.

⚠ ***Caution***
Used to highlight hazards which are associated with the activity that is being described, whereby damage could occur to the appliance.

Note
This indicates important information and application tips.

Assembling the appliance

Assembly of the unit is illustrated on a separate supplementary sheet.

Disposal instructions
Dispose of packaging remnants, old units, etc., in accordance with local regulations.

Operating safety

Also follow the instructions in the engine handbook.

⚠ ***Danger***
Accident
- *No person, especially children, and/or animals should be allowed to stand close to the mower while it is in use. Risk of injury due to ejected stones or other objects.*

Falling over
- *Operate the vehicle at walking speed only.*
- *Be particularly careful when mowing in reverse and pulling the appliance towards you.*
- *When mowing on steep slopes, there is a risk of the mower tipping over and you could be injured as a result.*
  Mow crossways to the slope, never upwards and downwards. Do not mow on inclines greater than 20%.
- *Be particularly careful when changing the direction and always pay attention to a good position.*
- *Mowing along perimeters involves a risk of injury.*
  Mowing near edges, hedges, or steep inclines is dangerous. Keep a safe distance from perimeters when mowing.
- *If the ground is wet the mower could slip due to reduced traction and overturn.*
  Mow only when the grass is dry.
- *Work only by daylight or in good artificial lighting.*

Injury
- *Always maintain a safe distance from the rotating tool by means of the steering handle.*
- *The working area of the operator is behind the steering handle during operation.*
- *Never place your hands, feet, or other parts of the body near rotating parts.*
- *Do not use the unit in adverse weather conditions, e.g. if there is a probability of rain or a storm.*
- *Turn off the engine and wait until the blade has stopped:*
  - *before tilting the lawnmower,*
  - *for transporting over surfaces other than grass.*
- *Switch off the engine to prevent the engine from being started unintentionally: Remove ignition key (if used), leave the engine to cool down and remove the spark-plug terminal,*
  - *before you clear the ejector of blockages and other hindrances,*
  - *before you check, clean, or configure the lawn mower or perform any work on it,*
  - *immediately after a foreign object is hit. Check the appliance for damage, and have any damage repaired at a specialised garage,*
  - *immediately after the appliance starts to vibrate with unusual violence and before you check the appliance.*
- *Never lift or carry the appliance when the engine is running.*
- *Check the surface on which the appliance is to be used and remove all objects that the appliance can take up and fling out.*
- *If the cutting tool hits a foreign object (e.g. stone) or if the machine starts vibrating violently: stop the engine immediately. Before continuing to use the unit, have it checked for damage by a service centre.*
- *In the case of mowers with rotary blades, never stand in front of grass ejection holes.*

Lawnmowers with grass catchers:
- *If you remove the grass catcher, you or other persons might get injured due to ejected, mowed materials or foreign bodies.*
  Never empty the grass sack while the engine is running.
  Switch off the appliance.

Danger of asphyxiation due to carbon monoxide poisoning.
Run the internal combustion engine outdoors only.

Explosion and fire hazard
- *Petrol vapours are explosive, and petrol is highly flammable.*
- *Fill the fuel before starting the engine. Keep the fuel tank closed when the engine is running or still hot.*
- *Fill with fuel only when the engine has been switched OFF and has cooled down. Keep away from naked flames, avoid creating sparks and do not smoke.*
  Fuel the appliance outdoors only.
- *Do not start the engine when fuel has spilt. Remove the appliance from the surface soiled with fuel and wait until the fuel vapours have evaporated.*
- *To avoid fire hazard, please keep the following parts free of grass and escaping oil:*
  - *engine,*
  - *exhaust,*
  - *batteries/storage batteries,*
  - *petrol tank.*

Tripping over
- *Operate the vehicle at walking speed only.*

⚠ ***Caution***

Damage to the lawnmower

– *Stones, scattered branches, and similar objects can damage the machine and impair its correct operation.*
  Remove all objects from the appliance's path before every use.
– *Operate the appliance only when it is in good technical condition Subject the appliance to a thorough visual check before using it. In particular, check the safety devices, controls and threaded connections for damage and secure attachment.*
  Replace damaged parts before operating the unit.

Operating times

Comply with the national/municipal regulations concerning the times when the mower may be used (if required, contact your local authority).

Directions

Specified positions on the unit (e.g. on the left, on the right) are always seen from the steering handle in the working direction of the unit.

Before starting up the unit for the first time

Filling the engine with oil

⚠ ***Caution***

The lawnmower is delivered without any lubricating oil due to transportation reasons.

– Therefore, you must fill the engine with oil before putting into operation for the first time.
  Please see engine manual.

Charge the battery

(appliances with electric starter)

⚠ ***Risk of chemical burns/ poisoning***

In extreme cases be alert to the escape of liquids or gases.

Depending on the model, the battery is located in the dashboard, on the upper handle (Fig. 2a) or on the mower deck (Fig. 2b/c).

⚠ ***Risk of electric shock***

Before using the charger, always check for external damage.
Never use a damaged charger.

⚠ ***Caution***

– *Ensure that the power supply operates at 220–230 V and 50 Hz according to the specifications on the rating plate of the charger.*
– *Protect the charger from humidity, rain, snow and frost.*
– *Charge battery in well ventilated and dry rooms only.*
  Do not exceed the maximum charging time of 12 hours.
– *Before starting the lawnmower, disconnect the charger from the power supply and unit.*

Fig. 2

- Before using the lawnmower for the first time, charge the storage battery for at least 10 hours.
  Only use the battery charger included in the delivery.

Note

Disconnect the battery charger in reverse order.

Disposal information for the charger

The charger is subject to the disposal regulations for electrical appliances. Observe the local regulations.

Always make any adjustments before using the unit

⚠ ***Risk of injury***

Before all work on this appliance

– *Switch off engine.*
– *Remove the ignition key (if used).*
– *Wait until all moving parts have come to a standstill; the engine must have cooled down.*
– *Remove the spark plug connector on the engine in order to prevent the engine from accidentally being started.*

Hang the grass catcher

(only in the case of lawnmowers with grass catchers)

Fig. 11

- Lift up the deflector flap and hook the grass sack onto the appliance.

Set the cutting height

⚠ ***Caution***

Select cutting height for uneven terrain to prevent the cutter from ever coming into contact with the ground.

Fig. 3

Set the cutting height of the grass as required.

Setting option (depending on model) from approx. 3 cm to maximum 9 cm.

Note

If units have individual wheel adjustment, set all wheels to the same height.

Model A

- Attach the wheels in the position required.

Model B

- Pull the flap and snap into place in the position required.

Model C

- Advance or push back the lever of the central vertical adjustment and snap into place in the position required.

Locking front wheels

(only units with lockable front wheels)

Fig. 4

Lock wheels to drive straight ahead – set the wheels in forward position and put hoop into large hole.

Wheels are freely movable – put clamp into large hole.

Filling with petrol and checking oil level

- Fill up with lead-free petrol (see engine manual).
- Fill fuel tank up to max. 2 cm below the lower edge of the inlet nozzle.
- Close fuel tank tightly.
- Check oil level and, if required, top up (see Engine manual).

Starting the engine

Fig. 5

⚠ ***Danger***

To prevent injury:

– do not start the engine when you are standing in front of the ejector;
– keep hands and feet well away from the cutting blade;
– never place your hands, feet, or other parts of the body near rotating parts; always keep away from the ejector.

Before starting the engine, disengage the clutches for all cutters and drives.

Do not tip the appliance when starting. Keep the appliance on an even surface with little or the shortest possible grass.

Information about the engine

Observe the information in the engine manual.

– Some models do not have an throttle. The engine speed is set automatically. The engine always runs at the optimal engine speed.
– Even if the engine is warm, it may be necessary to actuate the choke or the primer.
– Some models have no choke and no primer. The engine is automatically set to the particular starting process.

If the engine is cold:

- Open the fuel tap (if fitted).

Appliances with choke |⌃|:

- Set the choke lever to |⌃|, or pull out the choke and set the accelerator lever (if fitted) to /max. (Fig. 5A)

or

- set the accelerator lever |⌃| to (Fig. 5A).

Units with primer:

- Press primer forcefully 1–5x and move throttle (if fitted) to /max. – Fig. 5B.

If the engine is warm:

- Open the fuel tap (if fitted).
- Set throttle (if available) to /max. – Fig. 5B.

Appliances without electric starter:

Fig. 5C

- Stand behind lawnmower – Press and hold safety hoop.
- Slowly pull the starter cable grip until you feel resistance, and then pull quickly and strongly. Do not let the starter cable grip snap back, but let it return slowly.

For appliances with electric starter:

Fig. 5D

- Disconnect charger from power supply and unit.
- Stand behind lawnmower – Press and hold safety hoop.
- Turn ignition key on the steering handle until the engine starts (start attempt max. 5 seconds, wait at least 1 minute before the next attempt).

Note

If units feature electric starter, the engine (depending on model) can also be started manually with the pull-starter handle.

When the engine is running:

- After starting the engine (depending on the model):
  – return the choke (if fitted),
  – move the accelerator lever (if fitted) between /max. and /min. so that the engine can warm up briefly.
- Set the throttle to full throttle (if available).

Note

If you need more information about operating the engine, please refer to the engine manual.

Stopping the engine

Fig. 7

- Bring throttle (if available) into position /min.
- Release the safety hoop. The engine and the cutting tool stop after a short time.

Working with the unit

Engaging/disengaging gear drive

(only in the case of lawnmowers with gear drives)

Fig. 6A, B, C

Putting gear drive into gear /:

- Pull and hold the lever/hoop.

Throwing gear drive out of gear /:

- Release lever/hoop.

Information for units according to Fig. 6C

The unit can be switched on/off with the left or the right lever or even with both levers together.

Note

When the unit is pulled back, the back wheels may lock or there may be increased resistance on account of the design. This is not a fault with the unit but occurs for technical reasons.

Remedial action (depending on model): Without pulling the drive handle, push unit forwards a little, then backwards.

Changing drive speed of the wheel drive

(depending on model)

⚠ ***Caution***

Damage to the lawnmower

Make adjustments when the engine is running only.

Fig. 6D, E

- Select from the different speeds using the small leverr (1/min./ and 4/max./).

Fig. 6F, G

- Select from the different speeds using the lever (1/min./ and 4/max./).

Note

For technical reasons the speed may be difficult to change when the unit is at a standstill.
Remedial action: Pull drive bar and select speed setting.

Detaching and emptying the grass sack

(for lawnmowers with grass catchers)

Fig. 11

If cut grass is left lying on the ground or if the level indicator (optional, Fig. 12) indicates that the basket is full:

- Release safety hoop and wait until the engine stops.
- Lift the deflector flap and unhook the grass sack.
- Empty out the contents.

Working without the grass sack

Whenever you detach the grass sack, the deflector flap drops down. When working without a grass catcher, the mowed grass is ejected directly downwards.

Retrofitting for mulching

(for units with optional mulcher)

Units with rear discharge:

Fig. 8A

- Lift the ejection flap.
- Remove the grass catcher.
- Insert mulch key (depending on model).
- Lower the ejection flap.

Note

Models with integrated mulching function do not require a separate mulch key – a specially shaped rear flap assumes this function (Fig. 8B).

Units with side discharge:

Fig. 9

- Attach impact protection/mulch lock instead of the side discharge (Fig. 9A)

or

- Remove side discharge – impact protection/mulch lock closes automatically (Fig. 9B).

Changing units over to side discharge

(depending on model)

- If fitted: Remove grass catcher and lower the rear discharge flap.
- Lift impact protection/mulch lock and attach side discharge (Fig. 9C).

After finishing work

- Remove the ignition key (if used).
- Wait until all moving parts have come to a complete stop and the engine has cooled down.
- Turn off the fuel tap (if fitted – see engine manual).
- Disconnect the spark plug terminal on the engine.
- Empty the grass sack.

For appliances with electric starter:

- Recharge storage battery for 10 hours.

Note

Leave engine to cool down before placing unit in closed room.

Tips on lawn care

Here are some tips to help you keep your lawn looking healthy and ensure uniform growth.

Mowing

Lawns consist of various grass types. Frequent mowing promotes the growth of grass, resulting in strong roots and a firm sward.
If you seldom cut the grass, you will enhance the development of high-growing types of grass and other weeds, such as clover, daisies).
The normal height of a lawn is approx. 4–5 cm.

Only $^1/_3$ of the total height should be mown; therefore cut 7–8 cm long grass to normal height.
Try not to cut the grass shorter than 4 cm, otherwise the lawn will suffer during dry periods.
If the grass has grown particularly high (for example, during a holiday period), cut it back to its normal height in several stages.
When mowing, always overlap the mown swaths slightly.

Mulching (using the accessories)

The grass is cut into small pieces (approx. 1 cm) and left to lie on the lawn. The lawn therefore retains a lot of nutrients.
For the best possible result the grass must always be kept short, see also section “Mowing”. Observe the following when mulching:

- Do not mow wet grass.
- Never mow more than 2 cm.
- Mow slowly.
- Use the maximum engine speed.
- Clean the cutters regularly.

Transporting the appliance

Short distances by hand

Danger

Objects may be caught and ejected by the rotating cutter deck and cause injury and/or damage.
First stop the engine before moving it over surfaces other than grass.

Using a vehicle

Danger

Before transportation, always stop the engine and leave to cool down. Remove spark-plug terminal.
The appliance must not be tilted when it is transported.
For transport on or in a vehicle, secure the appliance adequately against slipping.
Empty the fuel tank before transporting the unit. Filler cap must be closed tightly.

Lawnmowers with collapsible bars:

Fig. 10

- The steering handle can be folded down to facilitate storage.

Servicing/cleaning

⚠ ***Danger***

To protect against injury before all work on the appliance

- *Switch OFF the engine.*
- *Remove the ignition key (if used).*
- *wait until all moving parts have come to a complete stop and the engine has cooled down.*
- *Remove the spark plug connector on the engine in order to prevent the engine from accidentally being started.*
- *Take into account additional safety information in the engine manual.*

⚠ ***Danger***

To protect against injury from the cutters, have a specialist garage perform all work such as replacing or regrinding the cutters (special tools required).

Tightening torque of the blade screw:

- *51-68 Nm (lawnmower with steel housing)*
- *36-44 Nm (lawnmower with plastic housing)*

⚠ ***Caution***

When tilting the unit, always ensure that the spark plug is face up to prevent fuel or oil damaging the engine.

Servicing

⚠ ***Caution***

Please observe the maintenance instructions in the engine manual.

At the end of the grass-cutting season, have the appliance checked and serviced in a specialist workshop.

Any repairs as well as the replacement of defective batteries or defective fuses may be carried out by a service centre only.

⚠ ***Caution***

Environmental hazard caused by engine oil.

After changing the oil, take the waste oil to a waste oil collecting point or to a waste disposal company.

⚠ ***Batteries pollute the environment.***

Used batteries do not belong in domestic waste. Give used batteries to your dealer or other disposal company. Remove batteries before appliances are scrapped.

ⓘ **Note**

Observe the inspection and maintenance intervals in the engine manual. Depending on the model, your unit features an electronic maintenance indicator (Fig. 13).

Observe the appropriate maintenance indicators in addition to the written maintenance instructions. Operation as well as further information can be found in the separate operating instructions which are enclosed with the maintenance indicator.

Before each operation

- Check oil level; if required top up.
- Check screw connections are tight, if required tighten.
- Check safety devices.

Check the point of contact of the clutch:

(only in the case of lawnmowers with gear drives)

- The lawnmower should not drive forwards when the engine is running and when the gear drive is not engaged.
- The lawnmower should drive forwards when the engine is running and the gear drive is engaged.

Fig. 15

- If required, set contact point using thumb wheel/adjusting nut on the wheel drive lever (depending on design on the underside of the control panel) or Bowden cable.

ⓘ **Note**

Adjustments are not possible on some models.

After the first 2–5 operating hours

- Change oil (please see engine manual enclosed).

Each time after mowing or every 8 weeks

(only lawnmower with electric starter)

- Recharge storage battery for 10 hours.

Once a season

- Change oil (please see engine manual enclosed).
- Lubricate the pivot points and torsion spring on the ejector cover.
- At the end of the season the appliance must be checked and serviced at a specialist garage.

Cleaning

⚠ ***Caution***

Clean the appliance after every use. Failure to clean the appliance can damage the materials and cause malfunctions.

Do not clean the unit with a high-pressure cleaner.

Cleaning the grass sack

(only in the case of lawnmowers with grass catchers)

The easiest time to clean the grass catcher is immediately after mowing.

- Detach and empty the grass sack.
- The grass sack can be cleaned by means of a powerful jet of water from a garden hose.
- Allow the grass sack to dry out thoroughly before using it again.

Cleaning the lawnmower

⚠ ***Danger***

Work on the cutters can cause injury. Wear safety gloves for your protection.

⚠ ***Caution***

Tilt the lawnmower in such a way that the spark plug is at the top so that the engine is not damaged due to petrol or oil.

Do not splash the unit with water, otherwise electric components may be damaged.

Whenever possible, always clean the appliance directly after mowing.

Units without deck washing system:

- Clean the cutter chamber and the ejector cover with brush, hand broom, or cloth.
- Set the appliance down on its wheels, and remove all visible grass residue and other soiling.

Clean lawnmowers with deck washing system (depending on model)

Units with deck washing system:

Fig. 14

Lawnmowers with a deck washing system feature a water connection. Grass clippings can then be rinsed off the underside of the mower deck and deposits of corrosive chemicals prevented.

After mowing, proceed as follows:

- Place unit on level ground, free of debris, stones, etc.

Note

Discharge chute must not be directed at houses, garages, etc.

- Attach a commercially available hose adapter (optionally included in the product package) to a water hose and connect to the water connection on the mower deck.
- Turn on water.
- Start engine and leave running for several minutes.
- Stop engine and remove water hose from the appliance.

At the end of the cleaning process:

- Start engine and leave running for several minutes to dry the underside of the mower deck.
- Stopping the engine.

Laying up the vehicle

Danger of explosion and risk of being burnt.

When there is fuel (petrol) in the tank, never keep the appliance in rooms where fuel vapours can come into contact with naked flames or sparking.

Caution

Damage to mower materials.

Keep the vehicle only in clean and dry rooms when the engine is cold. Protect the lawnmower when storing it for longer periods of time e.g. against rust in winter.

At the end of the season or when the vehicle will not be used for longer than a month:

- drain off the fuel into a suitable receptacle, and immobilise the engine as described in the engine manual.

Caution

Drain fuel outdoors only.

- Clean the appliance and the grass sack.
- To protect metal parts from rust, wipe them all down with an oiled cloth (resin-free oil) or apply an oil spray.
- Charge the battery (if fitted).

Warranty

The warranty rules issued by our company or the importer apply to every country.
As part of the warranty, we remedy malfunctions on your appliance free of charge provided that this malfunction is caused by a material or manufacturing defect.
In the event of a warranty claim, please turn to your dealer or the nearest branch office.

Engine

The manufacturer of the engine is liable for all engine-related problems with respect to output power, power measurement, specifications, warranties, and service. More detailed information can be found in the owner/operator handbook provided separately by the engine manufacturer.

Identifying and eliminating malfunctions

Malfunctions that occur during the operation of your lawnmower often have simple causes that you should know and be able to repair on your own. In cases of doubt your specialised garage will be pleased to assist you further.

Problem	Possible cause(s)	Remedy
Starter cable resists pulling.	Safety loop has not been pressed.	Press safety loop against the upper bar.
	Blade is blocked.	Remove spark plug connector and get rid of the blockage.
	Engine defective.	Contact a specialist garage.
Engine does not start.	Throttle is not in the right position.	Set throttle to position I|or CHOKE (if the engine is cold).
		Set throttle to /max. position or START (if the engine is warm).
	Lawnmower is standing in long grass.	Place the lawnmower onto a surface with shorter grass.
	No fuel in the tank.	Fill tank with clean, fresh fuel.
	Spark plug terminal not connected.	Connect spark plug terminal.
	Fuel old or dirty.	Replace with new fuel.
	Air filter clogged.	Clean air filter.
	Choke not actuated.	Actuate the choke.
	Primer not pressed during cold-start.	Actuate primer.
– For lawnmowers with electric starting devices:	Battery discharged.	Charge battery with provided battery charger.
	Lead damaged.	Check whether electric lead OK.
	Fuse defective.	Have defective fuse replaced by a service centre.
Unusual noises (rattling, clanging, knocking).	Screws, nuts, or other fasteners loose.	Tighten parts. If the noises persist: Contact a specialist workshop.
Shaking, vibrations.	Cutter(s) loose.	Cutter fastening screw must be tightened at specialist garage.
	Cutter(s) damaged.	Cutters must be replaced at specialist garage.
	Cutters not balanced correctly.	Cutters must be replaced or balanced at specialist garage.
	Engine not secure.	Engine must be secured at specialist garage.
Unclean cut or speed is decreasing.	Grass too high.	Set larger cutting height, if necessary mow twice.

Problem	Possible cause(s)	Remedy
Grass is not being picked up or grass catcher is not filling.	Grass too damp.	Let the lawn dry.
	Ejector clogged.	Switch OFF engine, remove hindrance.
	Cutters blunt.	Cutters must be replaced or reground at a specialist garage.
	Insufficient power from motor.	Mow more often. Select a greater cutting height.
	Grass sack full.	Switch off engine. Unload grass catcher.
	Dirty grass sack.	Switch off engine. Clean air ducts in the grass catcher.
Wheel drive does not work.	V-belt torn or gears defect.	Damaged parts must be replaced at a specialist garage.
	Cable pull/Bowden cable torn.	Damaged parts must be replaced at a specialist garage.