Art No	Description
88888-281	SP- Twin Sofa table-Screw Set

VENTURE DESIGN
HOME & INTERIOR

18038-688

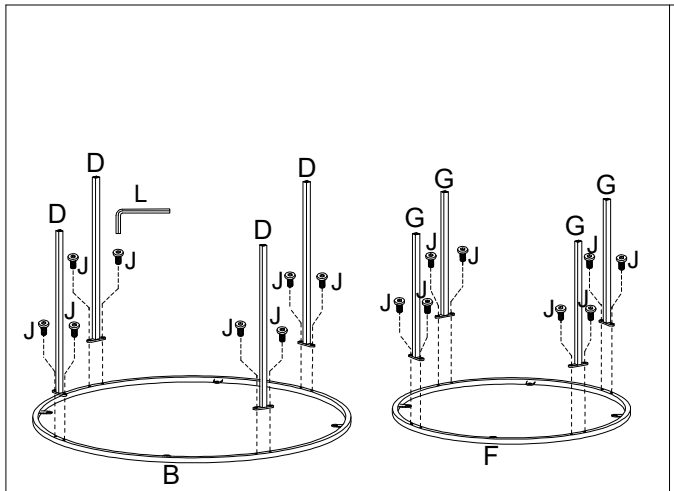

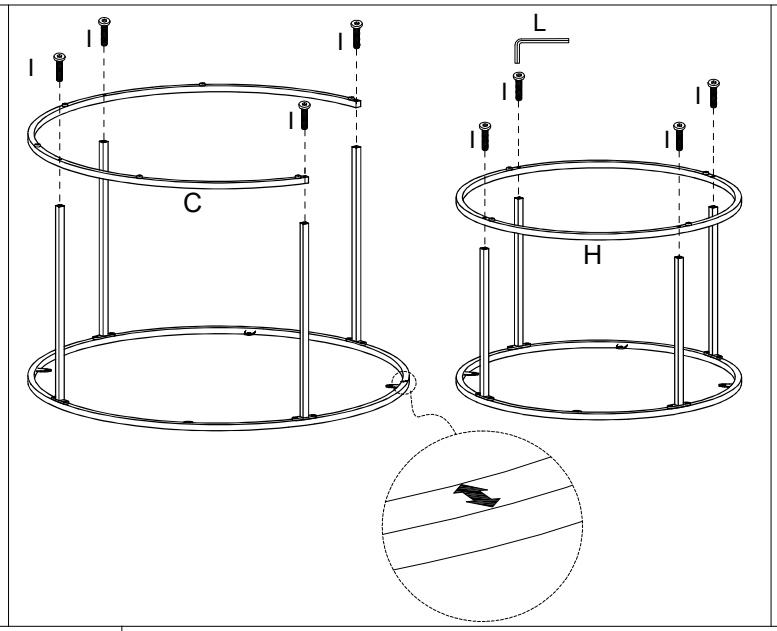

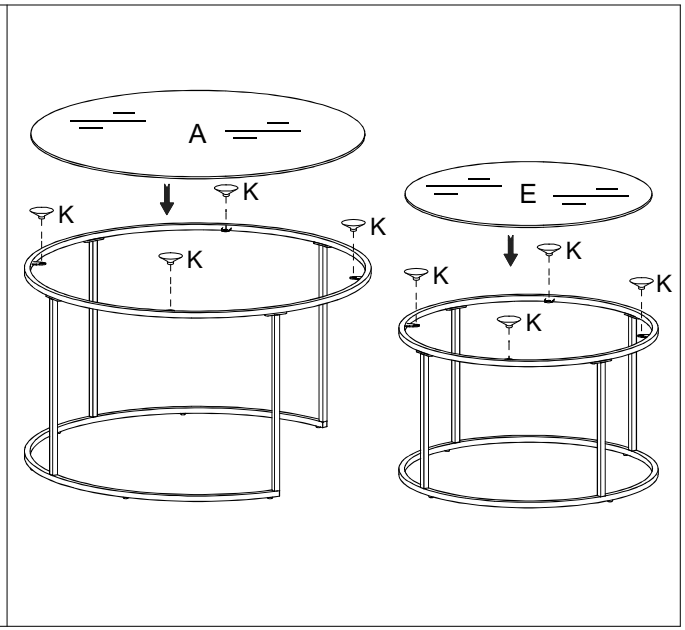

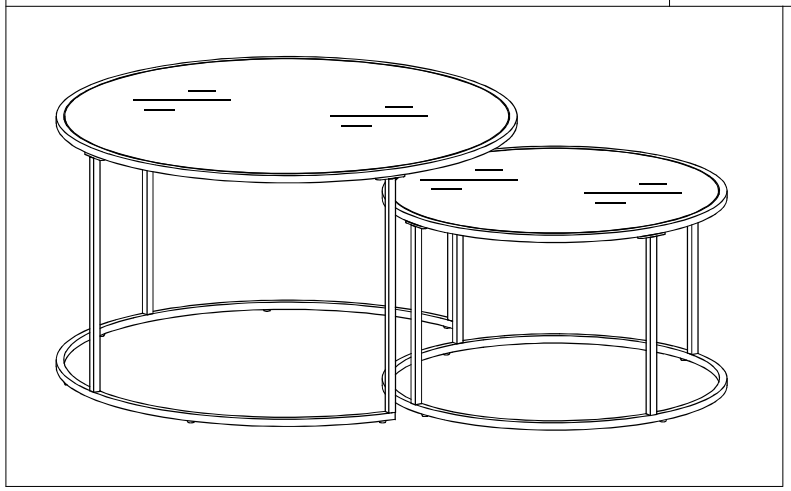

A		1	G		4
B		1	H		1
C		1	I		8
D		4	J		16
E		1	K		8
F		1	L		1

88888-281
88888-281
88888-281
88888-281