Art No	Description
88888-1008	SP - Stone Bedside Table - Screw set

furniture/fashion
Design by Daniel Johansson & Laila Bagge

VENTURE DESIGN
HOME & INTERIOR

15007-588

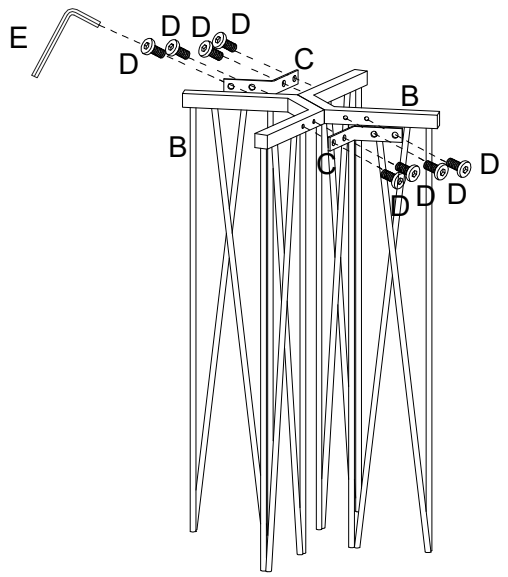

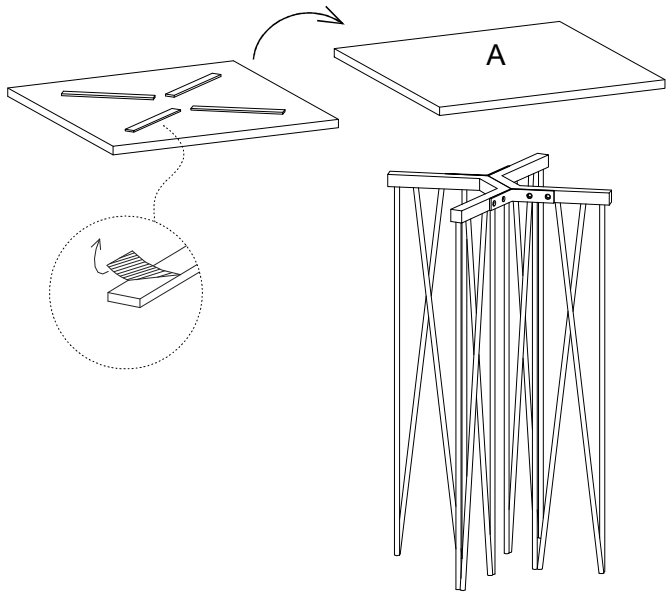

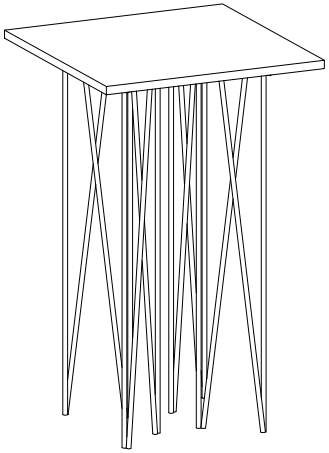

A	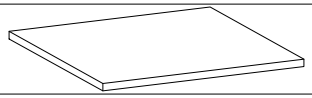	1	
B		2	
C	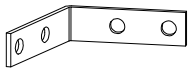	2	
D		8	88888-1008
E		1	88888-1008