D001 1pcs	D002 4pcs	D003 8pcs	D004 8pcs		D006 1pcs	D007 4pcs	D008 4pcs
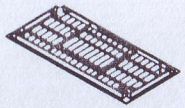	1999-175	8x20mm	Φ16x8.5x1mm		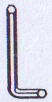	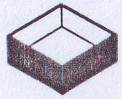 60x60mm	

1

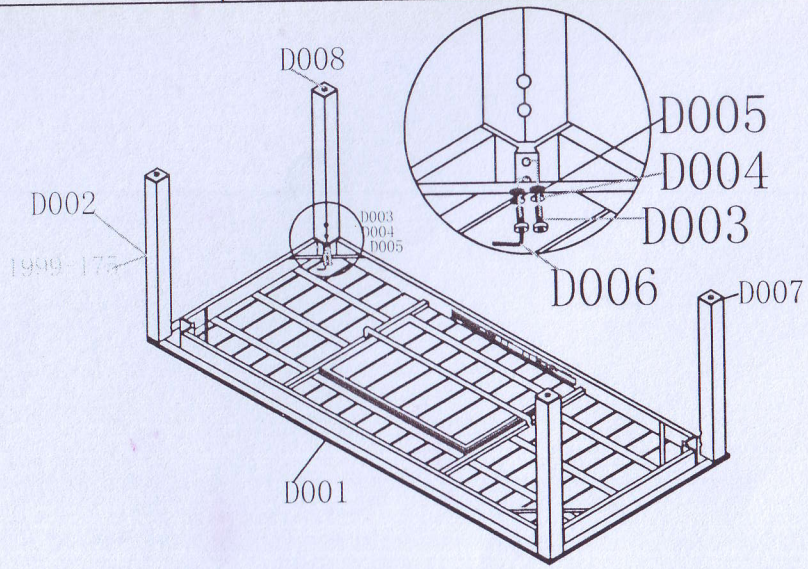

2

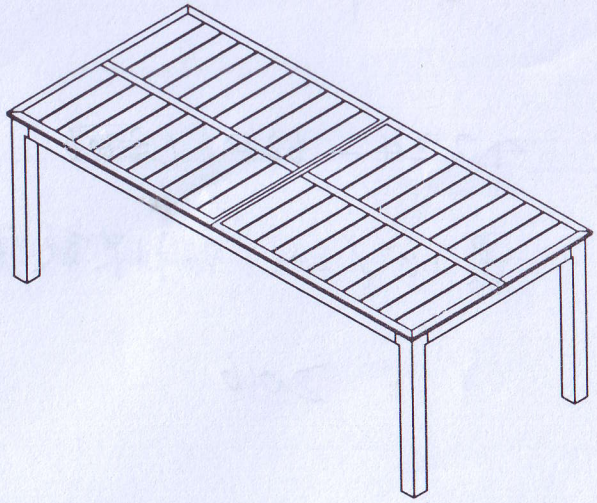

3

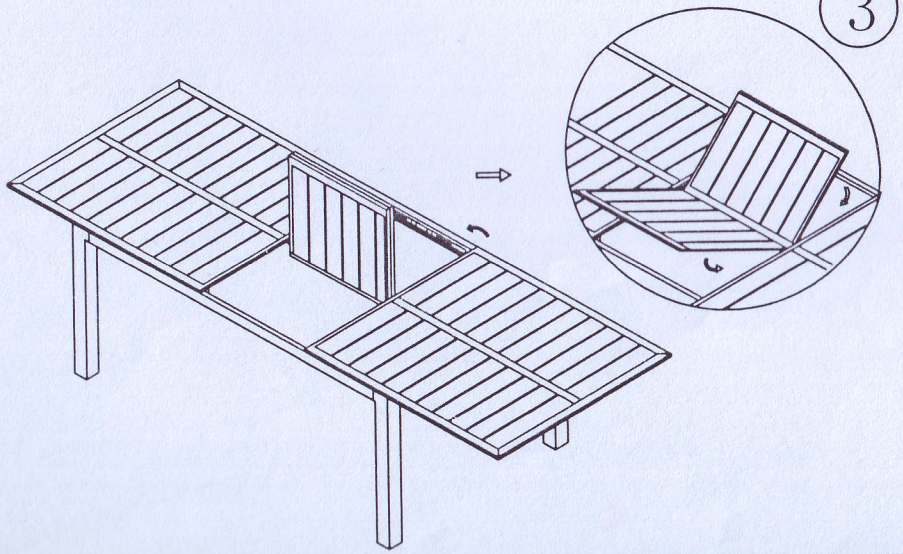
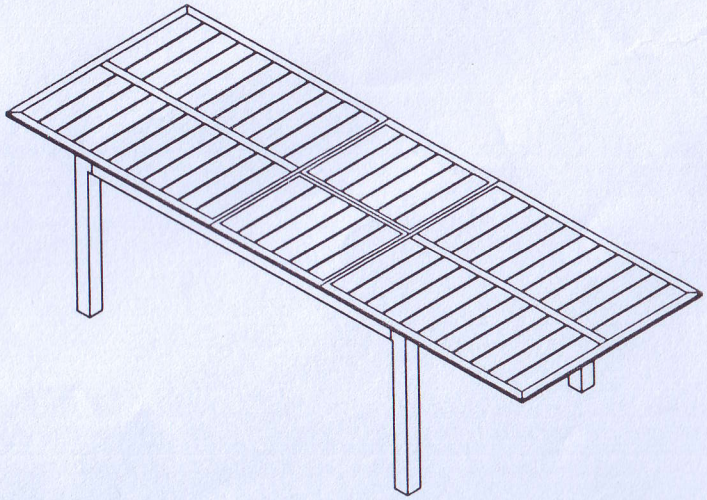
4