Art No	Description
88888-281	SP- Estella Dining table-Screw Set

VENTURE DESIGN
HOME & INTERIOR

19930-568

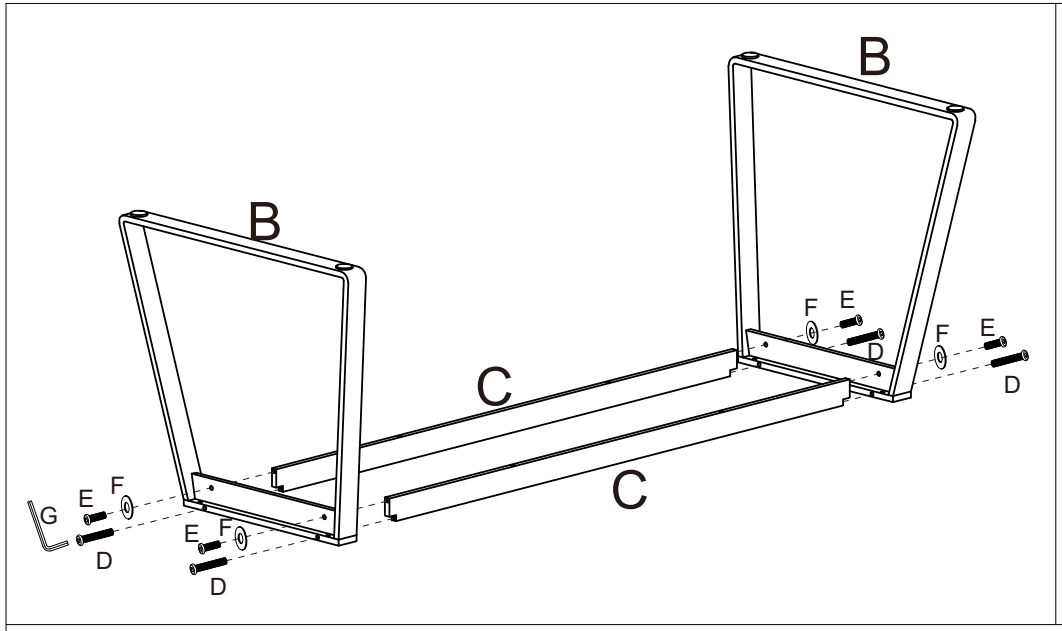

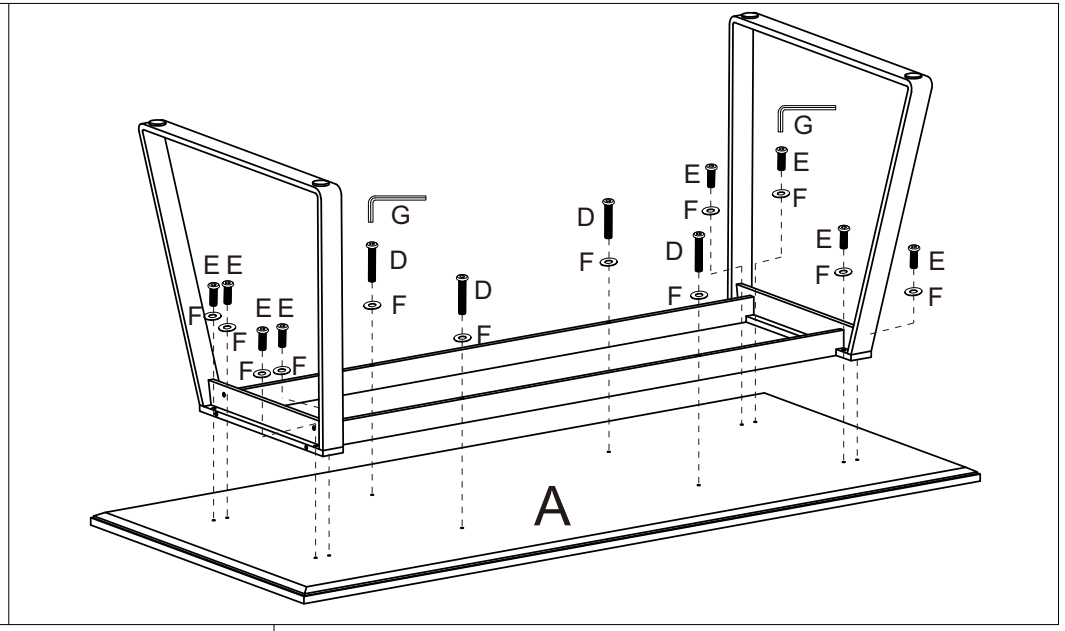

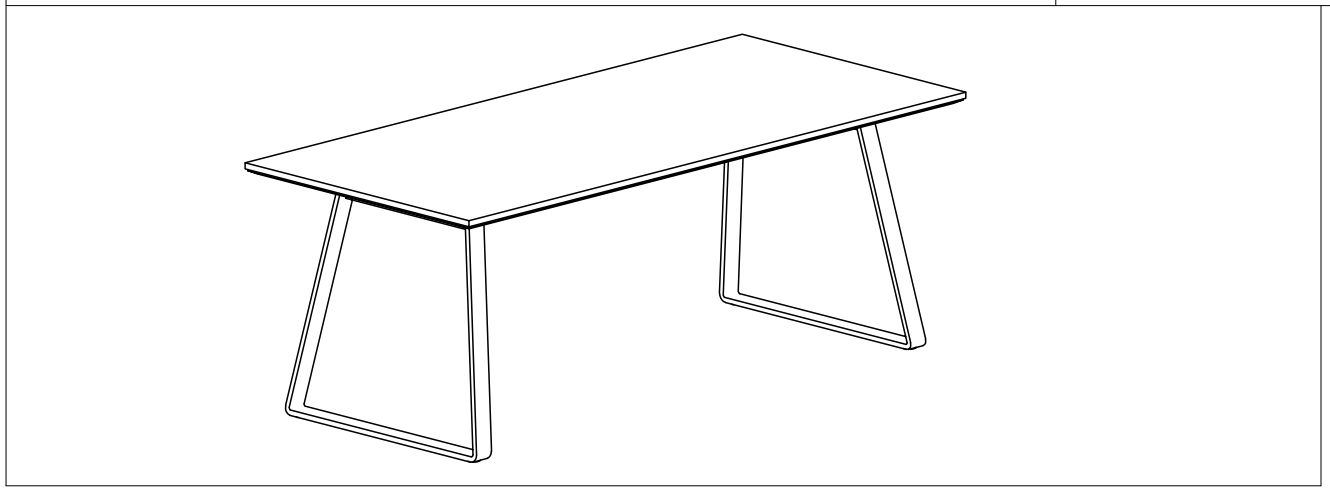

A	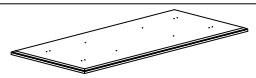	1	
B	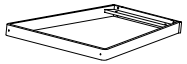	2	
C		2	
D		8	88888-281
E		12	88888-281
F		16	88888-281
G		1	88888-281